BEFORE THE BOARD OF COMMISSIONERS OF LANE COUNTY, OREGON

ORDER NO: 21-05-04-04	IN THE MATTER OF POSTING WEIGHT LIMITS FOR TRUCKS USING THE WEST FORK HORSE CREEK BRIDGE (STATE BRIDGE NO. 39B164) LOCATED ON DELTA ROAD AT MILE POST 0.13 IN THE RAINBOW / MCKENZIE BRIDGE AREA.

WHEREAS, pursuant to ORS 810.030, the County may impose limits on any weight or dimension of any vehicle or combination of vehicles to protect any highway or section of highway from being unduly damaged and to protect the interest and safety of the general public; and

WHEREAS, load rating analyses conducted by the State Bridge Engineering Section of the Oregon Department of Transportation found that the West Fork Horse Creek Bridge, State Bridge No. 39B164, located on Delta Road at Mile Post 0.13 should be weight limited; and

WHEREAS, the West Fork Horse Creek Bridge, State Bridge No. 39B164 is presently not load posted; and

NOW, THEREFORE, the Board of County Commissioners of Lane County **ORDERS** as follows:

1. That the West Fork Horse Creek Bridge, State Bridge No. 39B164, located on Delta Road at MP 0.13 be weight limited and posted as follows: 25 tons for the Type 3 trucks, 24 tons for the SU 4-axle trucks, 25 tons for the SU 5-axle & SU 6-axle trucks, 28 tons for the SU 7-axle trucks, 39 tons for the Type 3S2 trucks, and 38 tons for the Type 3-3 trucks.

ADOPTED this 4th day of May, 2021.

Joe Berney, Chair
Lane County Board of Commissioners

G:\MapRequests\Lemhouse_Brad\West Fork Horse Creek Bridge.mxd

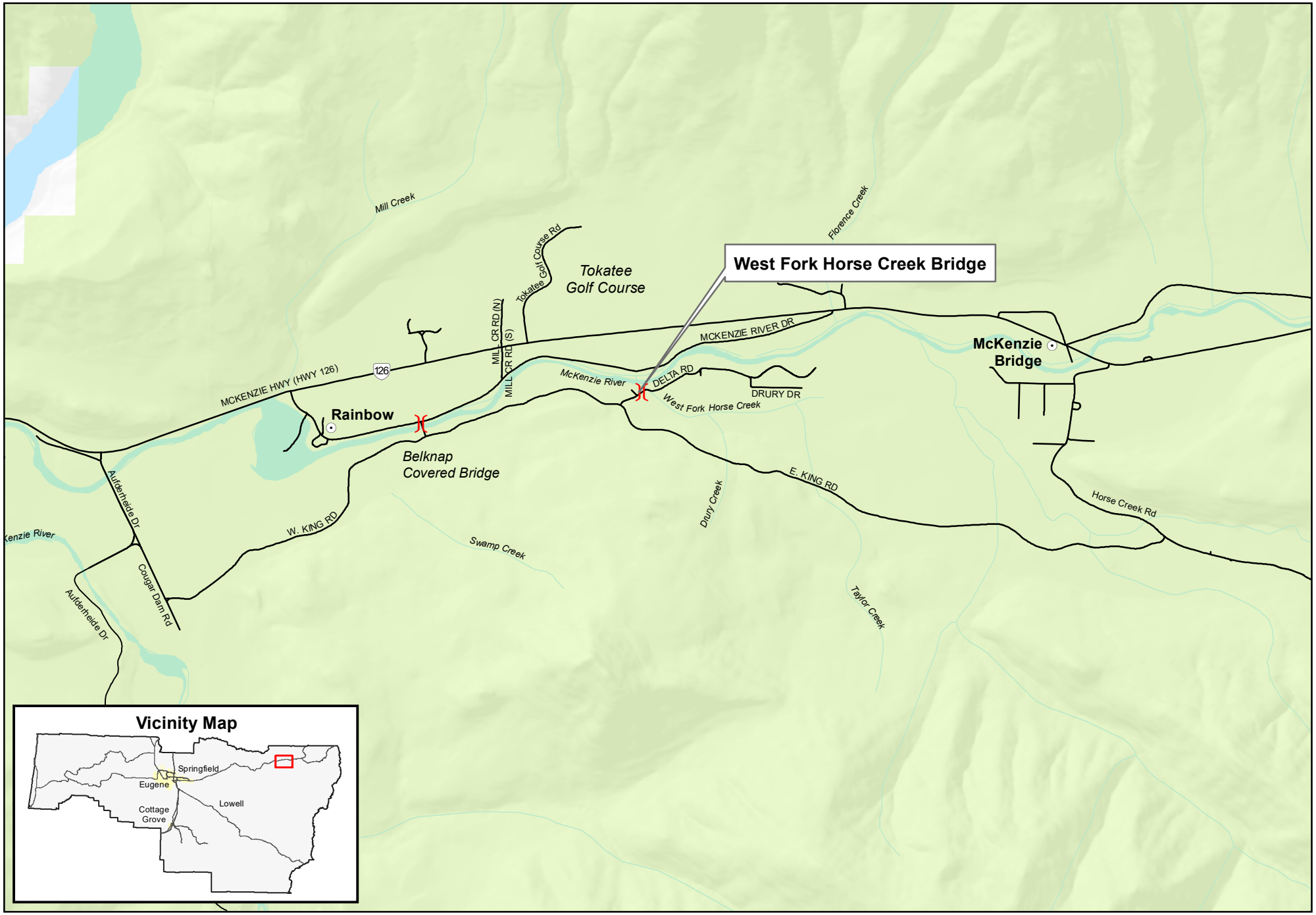

The information on this map was derived from digital databases on the Lane County regional geographic information system. Care was taken in the creation of this map, but is provided "as is". Lane County cannot accept any responsibility for errors, omissions or positional accuracy in the digital data or the underlying records. Current plan designation, zoning, etc., for specific parcels should be confirmed with the appropriate agency. There are no warranties, expressed or implied, accompanying this product. However, notification of any errors will be appreciated.

N

0 0.5 1 Miles

West Fork Horse Creek Bridge
Delta Road

Lane County, Oregon

Drawn By: LCPWGRL | Date: 4/9/2021 | Revised: 4/9/2021

Oregon
Kate Brown, Governor

Department of Transportation
Bridge Engineering Section
4040 Fairview Industrial Dr. SE, MS #4
Salem, OR 97302-1142
Phone: (503) 986-4200
Fax: (503) 986-3407

March 17, 2021

Peggy Keppler
Lane County Engineer
Lane County
3040 Delta Highway
Eugene, Oregon 97408

SUBJECT: Load Restriction Recommendation
West Fork Horse Creek, Delta Rd
Lane County
Bridge Number 39B164

Recommendation

An updated load rating was completed to reflect the current bridge condition and latest load rating standards. Based on results of the updated load rating, we recommend the bridge be posted at 25 tons for the Type 3, 39 tons for the Type 3S2, 38 tons for the Type 3-3, 24 tons for the SU4, 25 tons for the SU5 & SU6, and 28 tons for the SU7 vehicles.

Background

The West Fork Horse Creek, Delta Rd Bridge (Br No. 39B164) is a 103 foot long, 16 foot wide, timber thru-truss that was built in 1950. The July 2020 bridge inspection report indicates the superstructure is in "fair" condition and the substructure is in "good" condition. The bridge is currently open to all traffic.

Repair Options

Strengthening of the floor beams for positive moment and the top chord members for compression would allow the bridge to carry all legal loads, including all Specialized Hauling Vehicles and make posting unnecessary.

Posting Responsibility

ODOT recommends the bridge be posted for load until the bridge is strengthened or repaired. It is ultimately the county's responsibility to have the structure posted. The correct signs shall be in place no later than April 17, 2021. The posting signs shall be similar to figure below, as shown on the last page of this letter. In addition to placing posting signs at the bridge, signs shall be placed at approach road intersections or other points where prohibited vehicles can detour or turn around.

To assist us in complying with the National Bridge Inspection Standards, please let us know as soon as the bridge has been posted, or the bridge has been repaired. Please email digital images of the posting signs to Nam Bui to verify the posting complies with ODOT recommendations and FHWA requirements.

Contact Nam Bui, Local Agency Load Rating Engineer at (503) 986-3382 or email Nam.N.Bui@odot.state.or.us, for any questions on these issues.

Sincerely,

Ray Bottenberg

Ray Bottenberg, P.E., S.E.
Assistant State Bridge Engineer

Cc: Ray Mabey, State Bridge Engineer
Joel Boothe, State Bridge Operations Engineer
Bert Hartman, State Bridge Program & Standards Engineer
Rich King, Local Agency Coordinator
Tim Rogers, FHWA Oregon Division Bridge Engineer
Holly Winston, Senior Local Bridge Standards Engineer
Frannie Brindle, Area Manager
James Gamble, District 5 Manager
Eric Alexander, Assistant District Manager
Rick Johnson, Bridge Maintenance Supervisor
David Warren, Region 2 Maintenance & Operations Manager
Michele Becker, Region 2 Strategic Communications Manager
Matthew Stucker, Region 2 Senior Structural Design Engineer
Mike Goff, Senior Bridge Inspector
Tom Fuller, Communications Section Manager
Kathryn Van Hecke, US Forest Service Regional Structures Engineer
Dana Cork, OR/WA BLM Bridge Program Manager
Tim Shaw, Load Rating Engineer
Jon Rooper, Senior Load Rating Engineer
Nam Bui, Local Agency Load Rating Engineer
Paul Tichenor, Administrative Specialist
Brad Lemhouse, Lane County Senior Engineering Associate

Weight Limit Sign from ODOT Sign Policy and Guidelines, Chapter 3, page 3-111

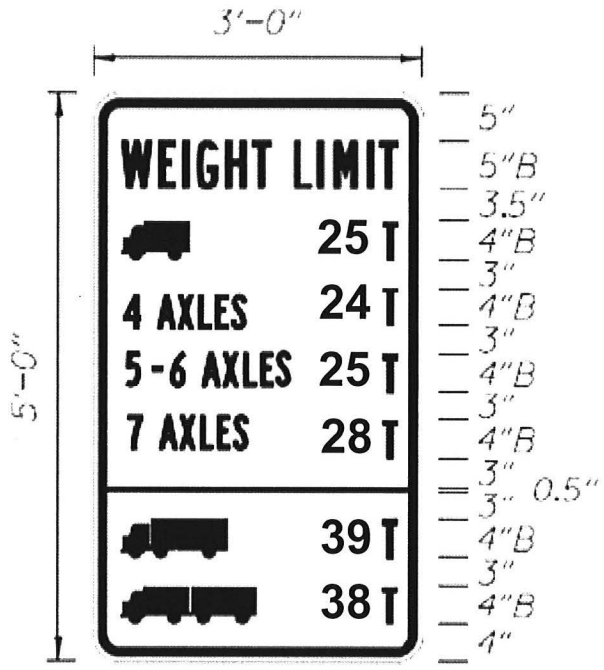

Sign No. OR12-5f

Oregon Department of Transportation

December 19, 2019

Bridge Posting Requirements for Specialized Hauling Vehicles (SHVs)

Specialized Hauling Vehicles (SHVs) are legal vehicles with legal axle weights that meet the Federal Bridge Formula (Formula B) equation for maximum axle group weight and represent short wheel based vehicles with multiple drop axles (such as modern concrete and dump trucks). These vehicles are commonly used in the construction, waste management, bulk cargo and commodities hauling industries. These vehicles consist of moveable axles that raise or lower as needed for weight, and result in higher loads concentrated over shorter distance.

Since the 1975 adoption of the American Association of State Highway and Transportation Officials (AASHTO) family of three legal loads, the trucking industry has introduced specialized single-unit trucks with closely spaced multiple axles that make it possible for these short-wheelbase trucks to carry the maximum load of up to 80,000 lbs and still meet the “Formula B” equation. The AASHTO family of three legal loads selected at the time to closely match the Formula B in the short, medium, and long truck length ranges do not represent these newer axle configurations. These SHV trucks cause force effects in bridges that exceed the stresses induced by the Type 3, Type 3S2, or Type 3-3 legal vehicles by over 50 percent in certain cases. The shorter bridge spans are most sensitive to the newer SHV axle configurations.

The Federal Highway Administration (FHWA) sent a memo to all states on November 15, 2013 requiring every state to post bridges for SHVs that do not pass a load rating analysis for these vehicles, in addition to the current standard legal vehicles.

Routine Commercial Traffic Truck Models

To understand how the SHVs differ from the current standard legal vehicles, it is necessary to know what the standard legal vehicles are. The AASHTO legal vehicles, designated as Type 3, Type 3S2, and Type 3-3 are sufficiently representative of routine average truck configurations in use today, and are used as vehicle models for load rating. When a load rating shows that a bridge does not have sufficient capacity for any one of these standard legal vehicles, the bridge must be posted for load.

When a bridge needs to be posted for less than legal loads, Oregon uses a single weight-limit sign or a three-vehicle combination sign that conforms to FHWA’s *Manual on Uniform Traffic Control Devices* (MUTCD). Some truck operators make the mistake to try and count the number of axles/wheels shown on the silhouettes in the posting sign to determine which one controls for their vehicle. The

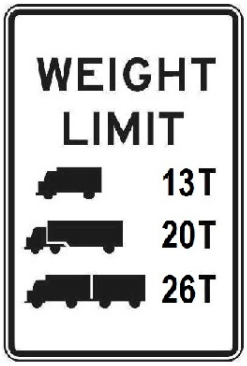

reason that is a mistake is that the top silhouette represents all single-unit legal vehicles; regardless of the number of axles/wheels they may have. Likewise, the middle silhouette represents all semi-tractor and trailer legal vehicles; regardless of the number of axles/wheels they may have. And the bottom silhouette represents double combination vehicles of either a single-unit vehicle or a semi-tractor and trailer towing a loaded trailer. In general, the silhouettes on the three-vehicle combination sign represent the Type 3, Type 3S2, and Type 3-3 Legal Vehicles that are used in bridge load ratings and load postings.

Type 3 Legal Truck

The Type 3 legal vehicle is a three axle single-unit vehicle with a gross vehicle weight of 50,000 LBS (25 tons).

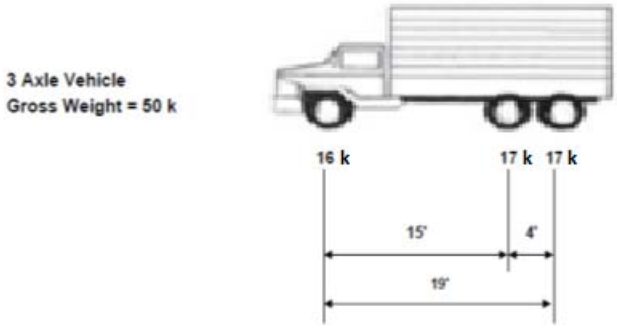

Type 3S2 Legal Truck

The Oregon Type 3S2 legal vehicle is a five axle semi-tractor and trailer combination with a gross vehicle weight of 80,000 LBS (40 tons). This Oregon vehicle model is heavier than the 72,000 LBS (36 tons) national Type 3S2 vehicle model.

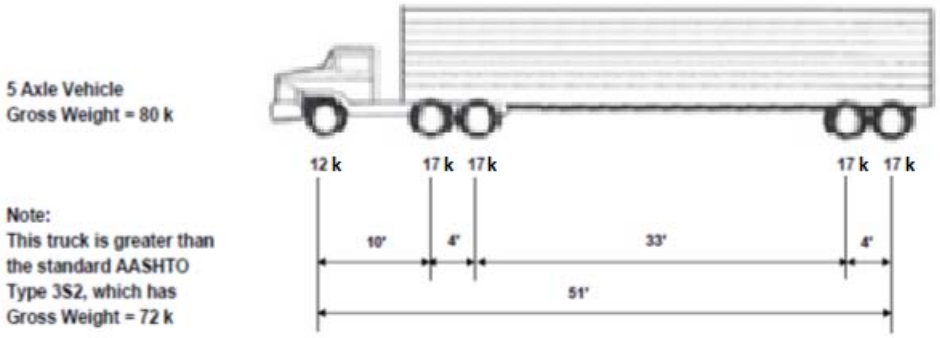

Type 3-3 Legal Truck

The Type 3-3 legal vehicle is a six axle combination of a single-unit vehicle pulling a loaded trailer with a gross vehicle weight of 80,000 LBS (40 tons).

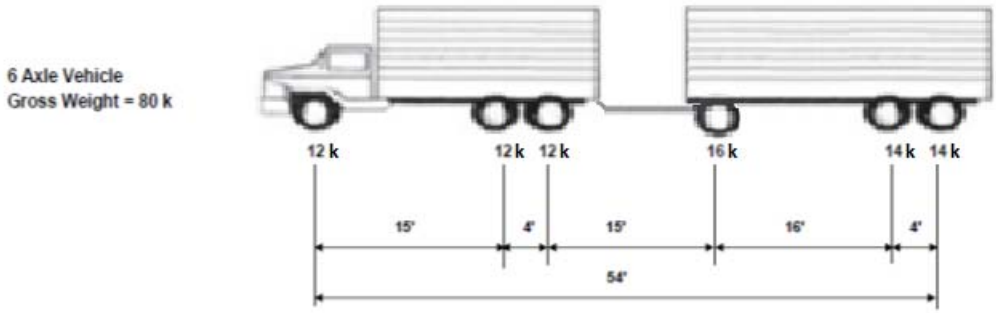

Specialized Hauling Vehicle (SHV) Models

Four Specialized Hauling Vehicle models were adopted by AASHTO in 2005 to represent new trucks that comply with Formula B and meet all Federal weight regulations.

SU4 Legal Truck

The first SHV model is the SU4, which is a four axle vehicle with a gross vehicle weight of 54,000 LBS (27 tons).

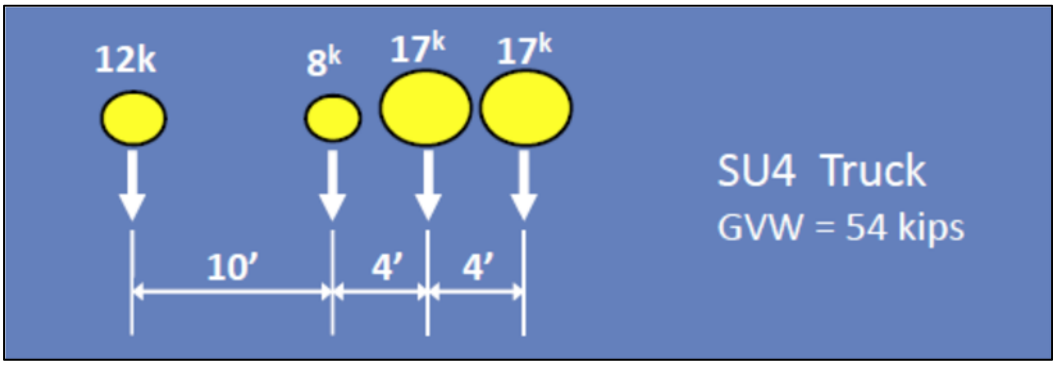

Oregon Department of Transportation

December 19, 2019

SU5 Legal Truck

The second SHV model is the SU5, which a five axle vehicle with a gross vehicle weight of 62,000 LBS (31 tons).

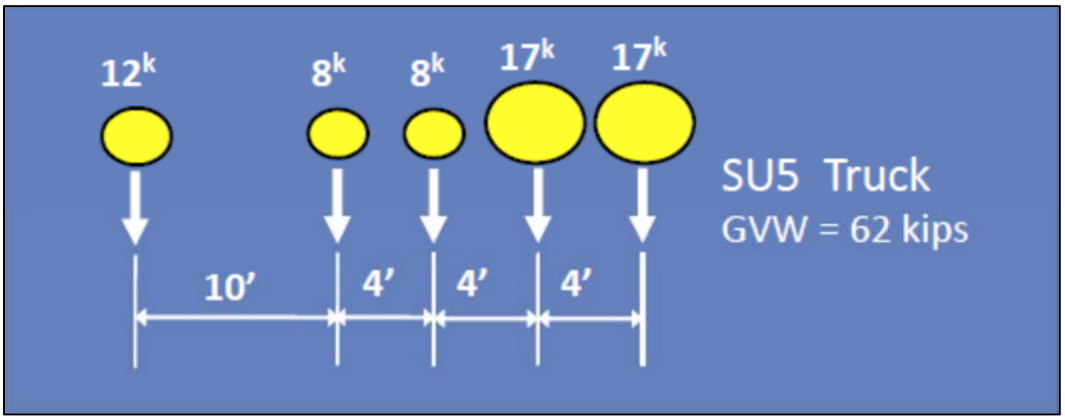

Oregon Department of Transportation

December 19, 2019

SU6 Legal Truck

The third SHV model is the SU6, which is a six axle vehicle with a gross vehicle weight of 69,500 LBS (34.75 tons).

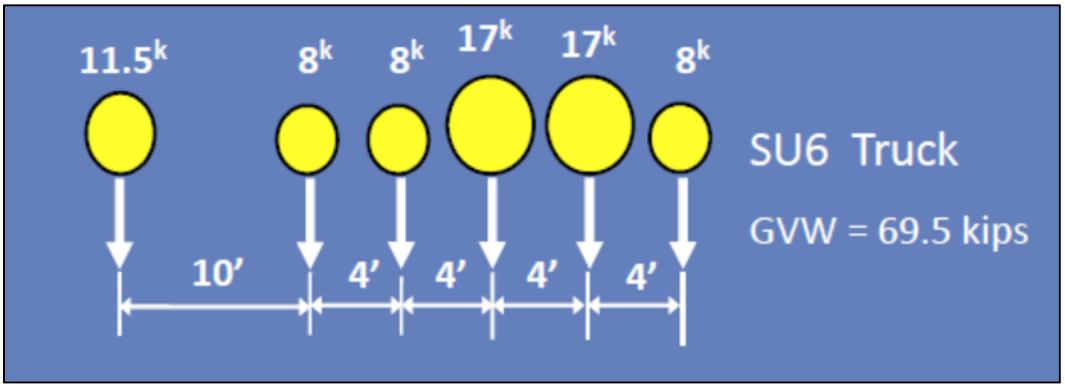

SU7 Legal Truck

The fourth SHV model is the SU7, which is a seven axle vehicle with a gross vehicle weight of 77,500 LBS (38.75 tons).

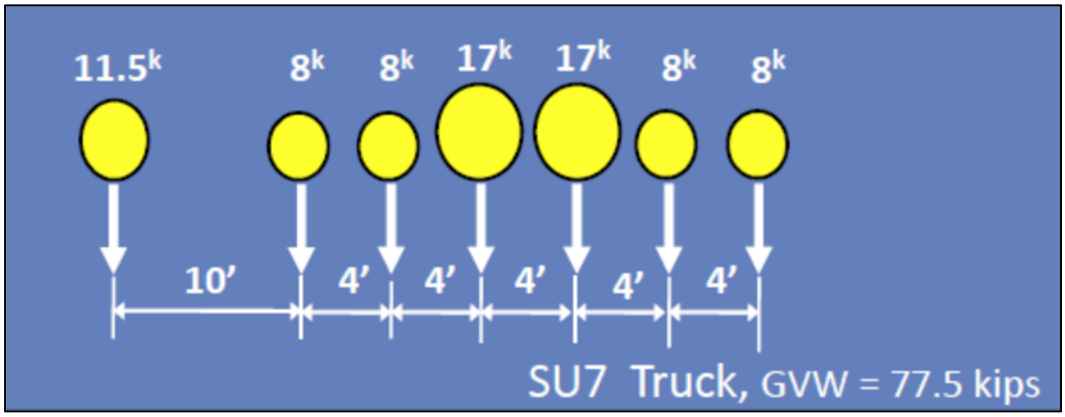

Bridge Load Posting for SHVs

When a load rating shows that a bridge does not have sufficient capacity for any one of the four Specialized Hauling Vehicle models, the bridge must be posted

for load. Posting signs must conform to the Manual on Uniform Traffic Control Devices (MUTCD). The MUTCD only has one sign (R12-5) that has silhouettes of trucks for load posting; which are for the three standard legal vehicles. The MUTCD does not allow any other silhouettes of trucks to be used on signs, so there will be no new silhouettes depicting the SHVs on a posting sign. Plus, there is a safety issue of having truck drivers attempting to count the number of axles depicted on a sign while travelling at highway speeds.

The MUTCD does allow the language on posting signs to be modified to account for the posting of Specialized Hauling Vehicles. It is up to each state to determine the language to be used on the posting signs for SHVs. ODOT has designed three new posting signs that will be used under different scenarios when a bridge requires posting for SHVs.

Since SHV trucks can cause force effects in bridges that exceed the stresses induced by the Type 3, Type 3S2, or Type 3-3 legal vehicles by over 50 percent in certain cases, there is a possibility that a bridge has sufficient capacity for legal axle weights and 80,000 LBS GVW for routine commercial traffic, but does not have sufficient capacity for the different SHV configurations. Instead of penalizing all trucks from using the bridge, the following posting sign was developed to restrict only multi-axle single unit vehicles to a lower gross vehicle weight. The posted weight for each single unit vehicle will be determined on a case-by-case basis for the safe load capacity of the bridge. The following weight limit signs are designated as Sign Number OR12-5g from the ODOT Sign Policy and Guidelines, Chapter 3, page 3-112.

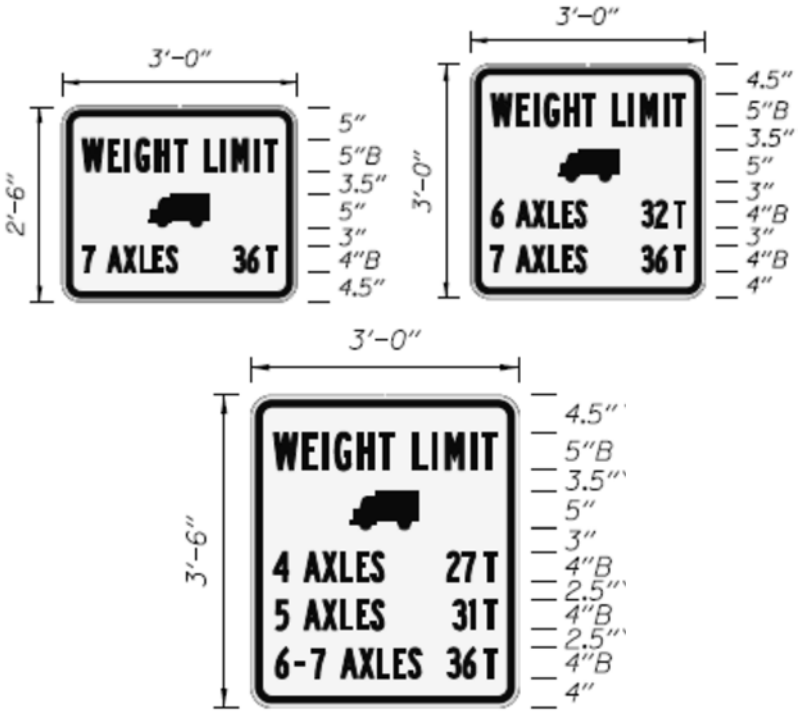
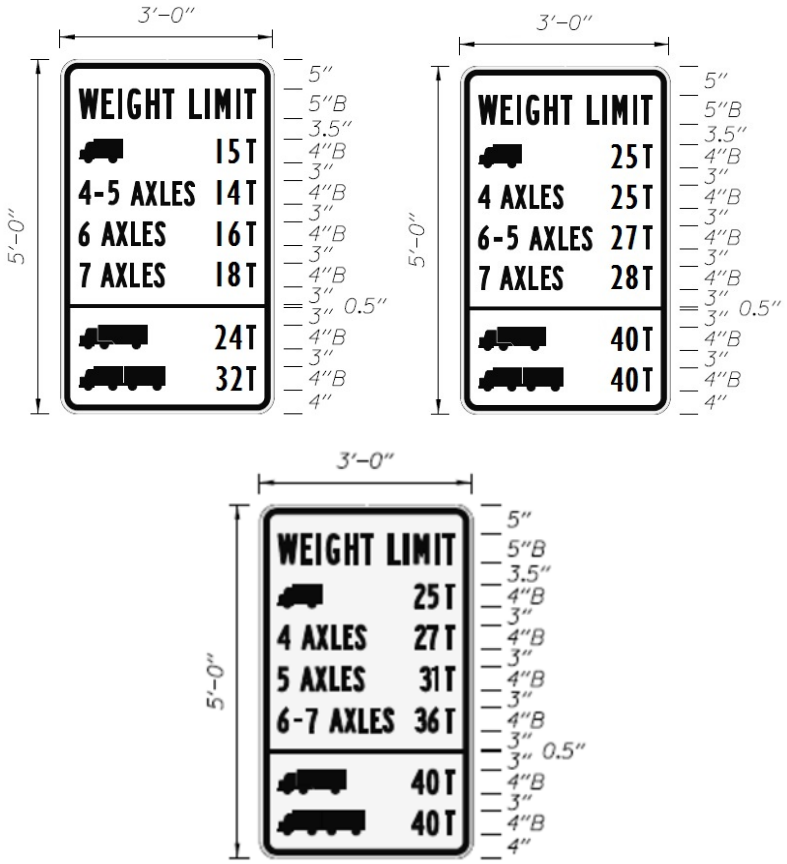
The second posting sign is to be used when both routine commercial traffic and SHVs are required to be posted for load. The following variations of the weight limit sign are designated as Sign Number OR12-5f from the ODOT Sign Policy and Guidelines, Chapter 3, page 3-111.